USN | | | | | | | | | | |

[22AS32]

THIRD SEMESTER B.Tech EXAMINATION, DECEMBER -2023

FLUID MECHANICS

Time: 3 Hours Maximum **Marks: 100**

Instructions: i. Missing data may be suitably assumed.

ii. Answer All Questions

PART-A **5 X 2=10**

1.	**a.**	Define the term *specific gravity*.	L1	1	**02**
	b.	Explain the concept of Newtonian fluids.	L2	1	**02**
	c.	Define streamline.	L1	2	**02**
	d.	Write down the control volume form of conservation of mass for steady compressible flow.	L1	2	**02**
	e.	Sketch the velocity profile in a pipe for laminar flow.	L1	4	**02**
		PART-B			**6 X 5=30**
2.	**a.**	With a neat sketch, explain absolute and gauge pressures.	L2	1	**05**
		OR			
	b.	Show that the buoyancy force acting on a submerged body is proportional to volume of the displaced fluid.	L2	1	**05**
3.	**a.**	Explain the method of static pressure measurement using static probe in incompressible flow with a neat sketch.	L2	2	**05**
		OR			
	b.	Explain the working of pitot-static probe.	L2	2	**05**
4.	**a.**	Explain the concept of geometric similarity.	L2	3	**05**
		OR			
	b.	With a simple example, explain Buckingham Pi theorem.	L2	3	**05**
5.	**a.**	Sketch and explain Moody diagram with respect to fully developed flow in circular pipes.	L2	4	**05**
		OR			
	b.	Explain the major and minor losses in pipe flow.	L2	4	**05**
6.	**a.**	Explain the concept of superposition of elementary flows.	L2	5	**05**
		OR			

	b.	Explain the concept of stream function.	L2	5	**05**
7.	a.	What is the cause of boundary layer separation? Explain the effects of boundary layer separation over an airfoil.	L2	6	**05**
		OR			
	b.	Explain *displacement thickness* with a neat sketch.	L2	6	**05**
		PART-C			**6 X 10=60**
8.	a.	The inclined surface shown in figure, hinged along edge A, is 5 m wide. Determine the resultant force, F_R, of the water and the air on the inclined surface.	L3	1	**10**

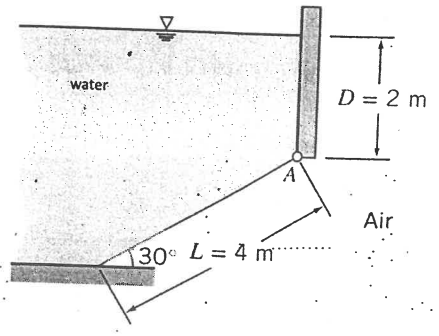

		OR			
	b.	A cylindrical can 75 mm in diameter and 150 mm high is filled with water to a depth of 80 mm. The can weighs 1.1 N. Determine the depth the can will sink when placed in water.	L3	1	**10**

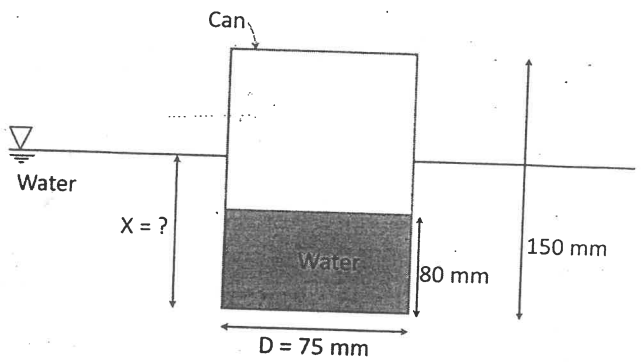

9.	a.	Consider the steady flow of water in a pipe joint shown in the diagram. The areas are: A_1 = 0.2 m², A_2 = 0.2 m², and A_3 =0.15 m². In addition, fluid is lost out of a hole at, estimated at a rate of 0.1 m³/s. The average speeds at sections **1** and **3** are V_1 = 5 m/s and V_3 =12 m/s, respectively. Find the magnitude and direction of velocity at section **2**.	L3	2	**10**

		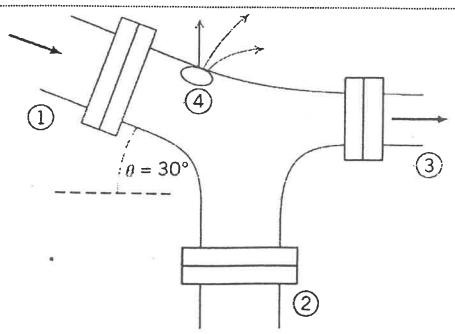			
		OR			
	b.	Air flows steadily at low speed through a horizontal nozzle and discharging to atmosphere at sea level. The area at the nozzle inlet is 0.1 m^2. At the nozzle exit, the area is 0.02 m^2. Determine the gage pressure required at the nozzle inlet to produce an outlet speed of 50 m/s. State assumptions taken to find the solution. Use air density at nozzle inlet as 1.23 kg/m^3.	L3	2	**10**
10.	**a.**	A torpedo-shaped object 900 mm diameter is to move in air at 60 m/s and its drag is to be estimated from tests in water on a half-scale model. Determine the necessary speed of the model. If the drag on the model is 1140 N, find drag of the full-scale object. Given: $\mu_{,air}$ = 1.86×10^5 Ns/m^2, $\mu_{,water}$ = 1.01×10^{-3} Ns/m^2, $\rho_{,air}$ = 1.2 kg/m^3, $\rho_{,water}$ = 1000 kg/m^3.	L3	3	**10**
		OR			
	b.	The drag force, F, on a smooth sphere depends on the relative speed, v, the sphere diameter, D, the fluid density, ρ, and the fluid viscosity, μ. Obtain a set of dimensionless groups that can be used to correlate experimental data.	L3	3	**10**
11.	**a.**	Determine the loss of head in friction when water at 15 °C flows through a 300 m long galvanised steel pipe of 150 mm diameter at 0.05 m^3/s. (Kinematic viscosity of water at 15 °C = 1.14×10^{-6} m^2/s. The Darcy's friction factor f is 0.02.). Also calculate the pumping power required to maintain the above flow.	L3	4	**10**
		OR			

	b.	In a fully developed flow through a pipe of 300 mm diameter, the shear stress at the wall is 50 Pa. The Darcy's friction factor f is 0.05. What is the rate of flow in case of **i.** water flowing through the pipe and **ii.** oil of specific gravity 0.70 flowing through the pipe?	L3	4	**10**
12.	**a.**	The velocity components of two-dimensional incompressible flow are $u=2xy$ and $v=a^2+x^2-y^2$. Show that a velocity potential function exists and find out the velocity potential.	L2	5	**10**
		OR			
	b.	Consider the flow field given by $\psi=ax^2 - ay^2$, where $a=3\ s^{-1}$. Show that the flow is irrotational. Determine the velocity potential for this flow.	L2	5	**10**
13.	**a.**	Sketch and explain the non-dimensional velocity profile and momentum flux profile for laminar and turbulent boundary layer flow over a flat plate.	L2	6	**10**
		OR			
	b.	Outline the steps involved in the derivation of the *momentum integral equation* for steady incompressible boundary layer flow.	L2	6	**10**